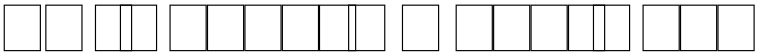

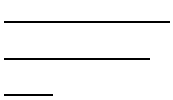

L

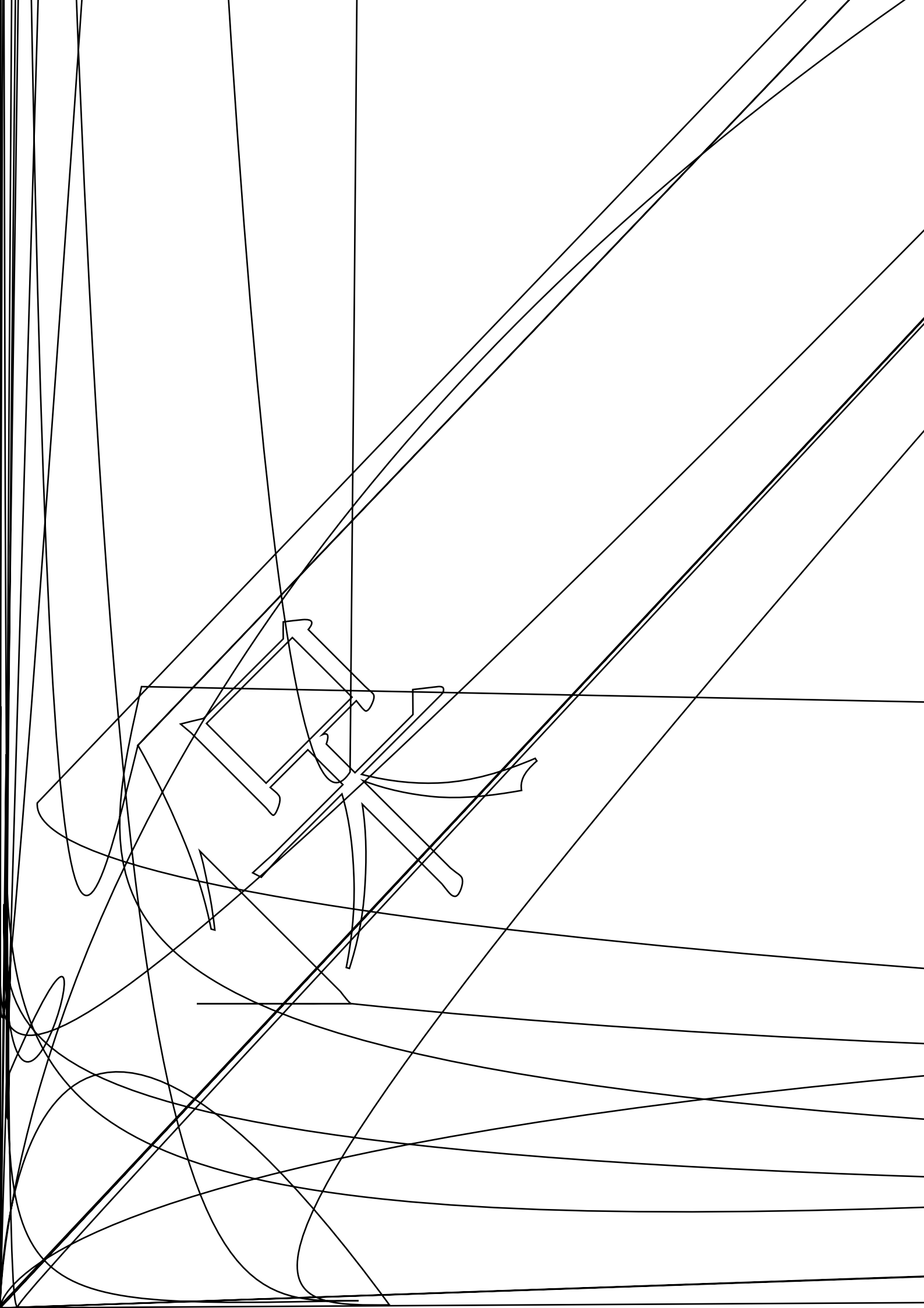

Carrier Tape Specifications

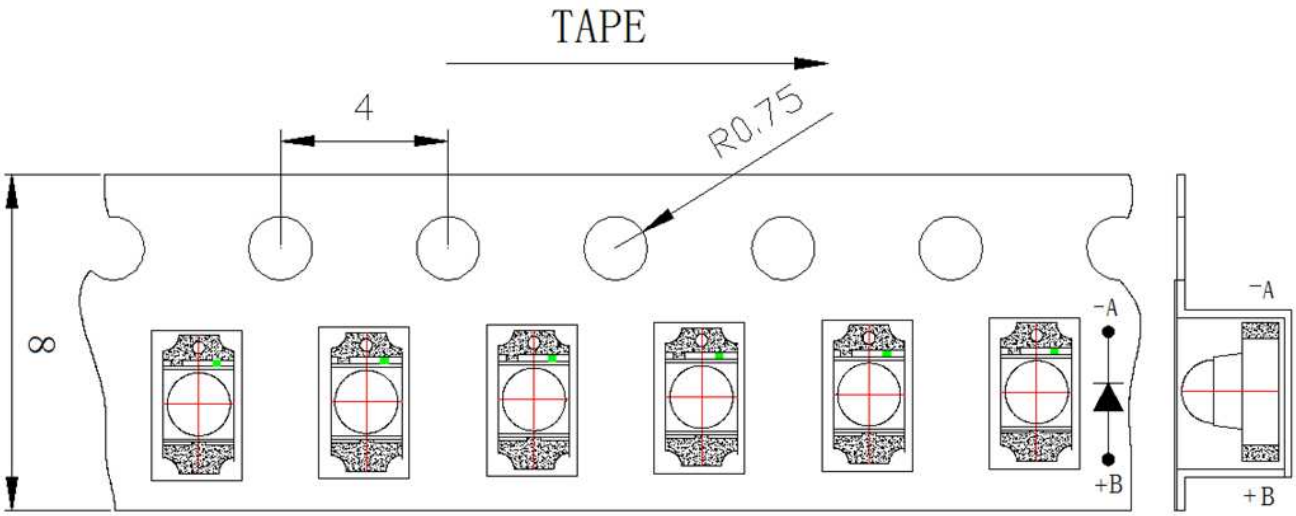
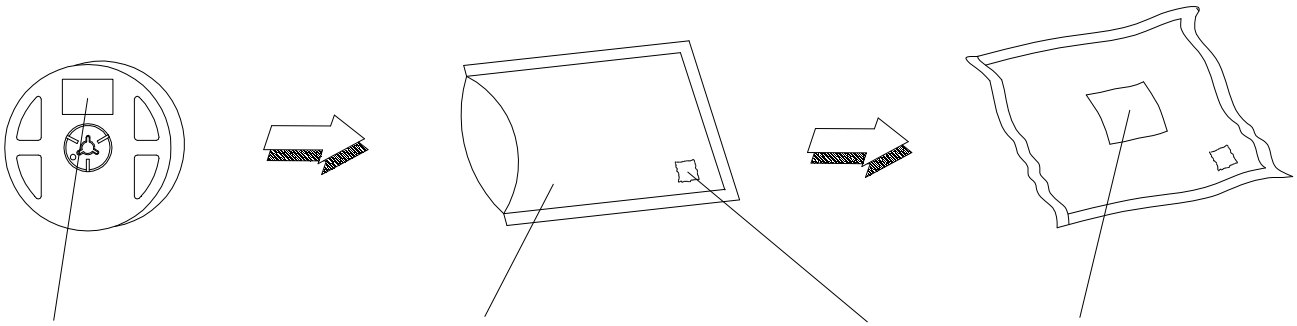
Moisture Resistant Packaging